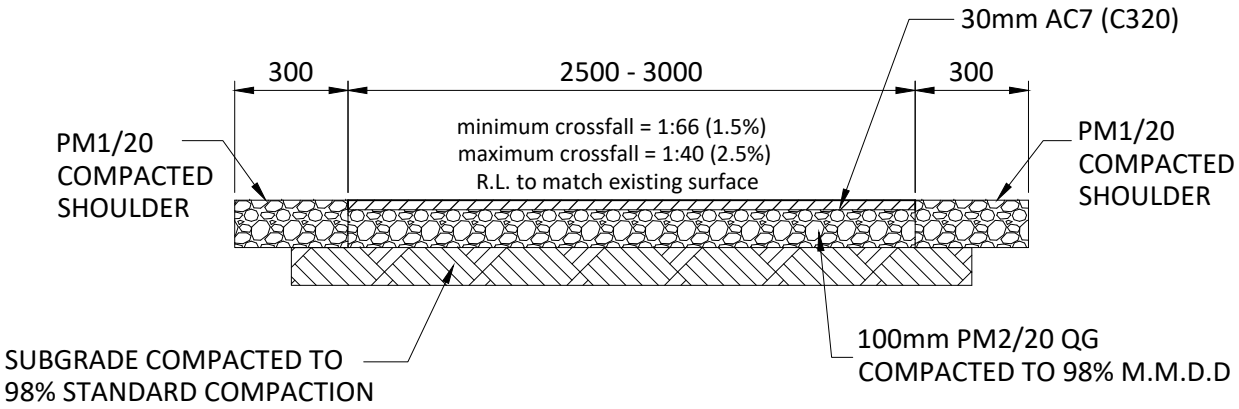

FOOTPATH - ASPHALT (SHARED USE PATH)

SCALE 1 : 20

NOTES:

1. MAXIMUM LONGITUDINAL GRADIENT OF FOOTPATH SHALL BE 1:33.

City of Charles Sturt

DRAWING FILE LOCATION
T:\AUTOCAD BLOCKS\2010+\FOOTPATH - ASPHALT SHARED USE PATH (M1526).dwg

COORDINATOR DESIGN
B. MORIAS
16.12.2022

EDITED
G.FERTEKLIS
16.12.2022
DRAWN
B.MORIAS
28.09.2017
DESIGNED
E. SOWULA
27.10.2016

STANDARD DETAIL

FOOTPATH - ASPHALT

SHARED USE PATH

SCALE AS SHOWN

CITY OF CHARLES STURT

SHEET 1 of 1

TRIM No. 16/319509

DRAWING No. M1526

REV 2