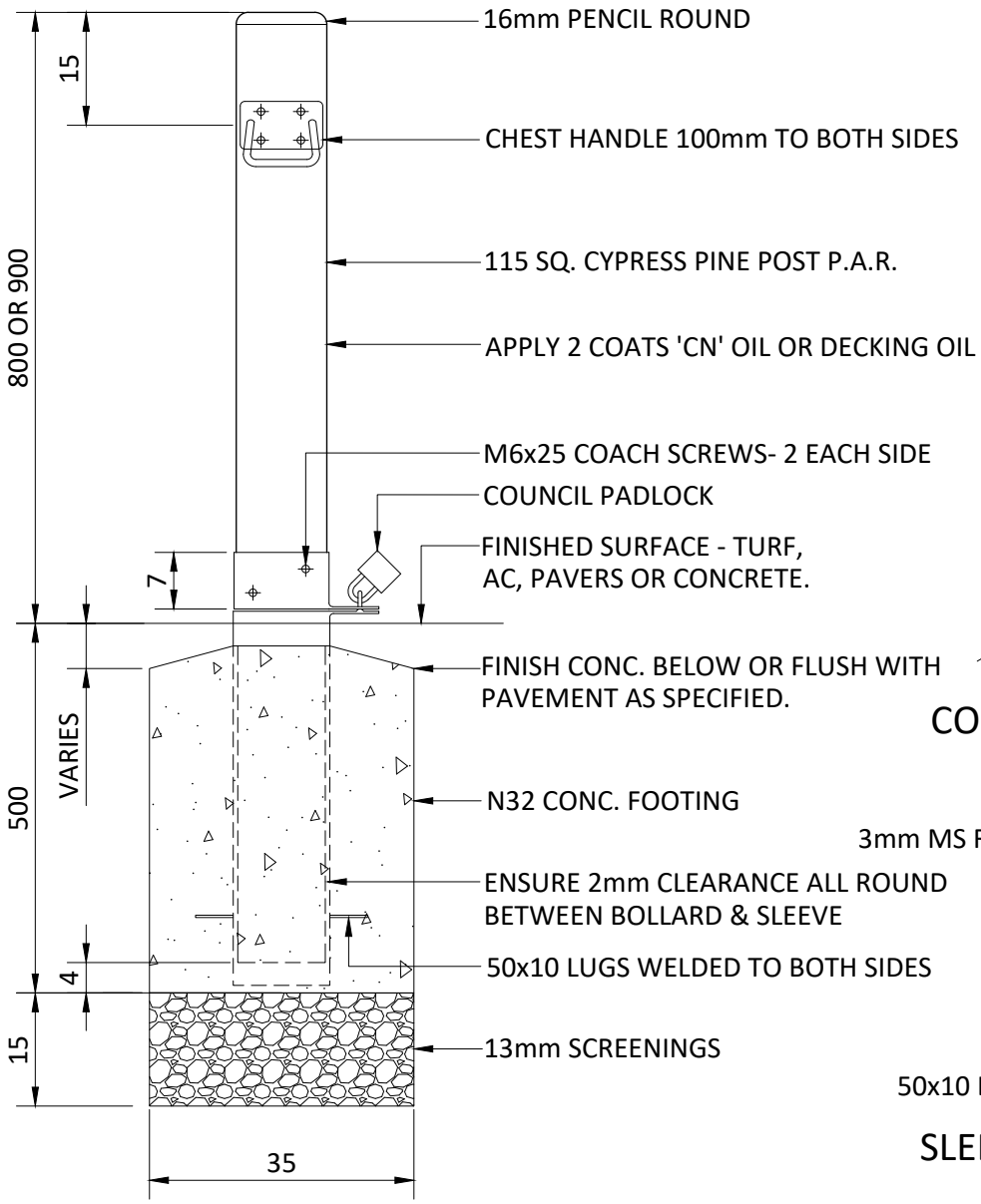

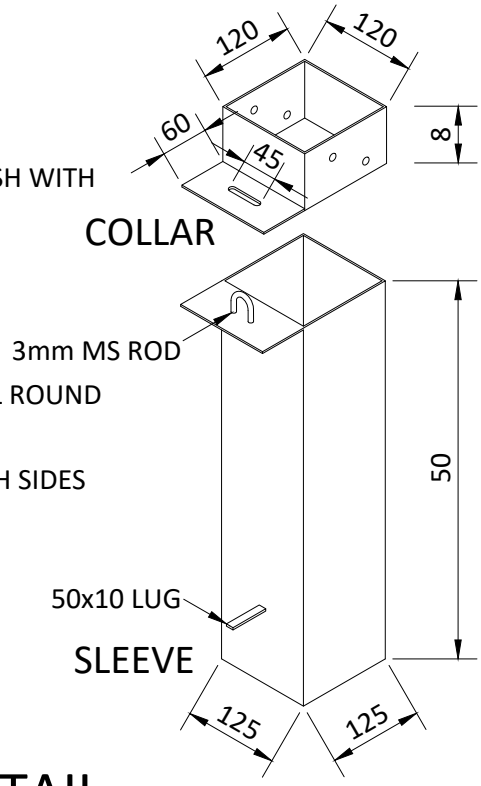

REMOVABLE BOLLARD DETAIL

SECTION & ISOMETRIC 1:10

NOTES:

- TIMBER SHALL BE SEASONED NATIVE CYPRESS PINE PAR.
- TIMBER SHALL BE STRAIGHT & FREE OF KNOTS, SHAKES & TWISTS.
- STEEL SHALL BE GRADE 350 3mm MS PLATE OR FLATS.
- CHECK PLANED TIMBER DIMENSIONS BEFORE FABRICATING COLLAR & SLEEVE.
- COLLAR & SLEEVE SHALL BE HOT DIPPED GALVANISED TO AS.1397
- ALL FASTENERS SHALL BE HOT DIPPED GALVANISED.
- APPLY 2 COATS OF 'CN' (COPPER NAPTHALENE) OIL TO DRY TIMBER SURFACES.

City of Charles Sturt

DRAWING FILE LOCATION
T:\AUTOCAD BLOCKS\2010+\BOLLARD REMOVABLE (M1232).dwg

COORDINATOR DESIGN
B. MORIAS
22.02.11

EDITED
J. CURSARO
22.02.11
DRAWN
D. ANDREWS
23.06.06
DESIGNED
D. ANDREWS
23.06.06

STANDARD DETAIL

REMOVABLE BOLLARD

SQUARE TIMBER TYPE

SCALE AS SHOWN

CITY OF CHARLES STURT

SHEET 1 of 1

TRIM No. 06/144304

DRAWING No. M.1232